Dart Aerospace Ltd.
1270 Aberdeen St
Hawkesbury, ON
K6A 1K7
Canada

Tel (613) 632-5200
Fax 613 632-5246

60621-01
Job Sheet 216010

Part No: 60621-01 **Job Qty:** 4 ea
Part Name: Bell 407 Forward Fitting

Part Weight: 0 lbs **Status:** New **Priority:** Medium
Job Created: 11/26/20 **Job Tracking No:**
Due Date: 12/11/20 **Created By:** Marie Lajeunesse
Type: ~~Stock~~ SOLD **Description:**
Note: DWG 60621 REV 3 IPP REV:A 20.11.26 NEW ISSUE FK VERIFY DD
Ship Via:

Bill of Materials

Job Routing

Op No	Operation	Qty	Start Date	Due Date	Standard Setup Hrs	Standard Run Hrs	Workcenter / Supplier	Lead Time	Sign-off
100	**HAAS 5 Axis**	4 pcs		12/10/20	0.75	4.00	HAAS - 1 - 5		SS/mk 20/12/06
							HAAS - 2 - 5		
110	**QC 2**	4 pcs		12/10/20	0.00	0.00	QC 2 - 1		
							QC 2 - 12		
							QC 2 - 14		mk 20/12/06
							QC 2 - 17		
							QC 2 - 19		
							QC 2 - 2		
							QC 2 - 20		
							QC 2 - 22		
							QC 2 - 23		
							QC 2 - 25		
							QC 2 - 32		
							QC 2 - 33		
							QC 2 - 35		
							QC 2 - 39		
							QC 2 - 4		
							QC 2 - 40		
							QC 2 - 44		
							QC 2 - 45		
							QC 2 - 48		
							QC 2 - 49		
							QC 2 - 50		
							QC 2 - 51		
							QC 2 - 52		
							QC 2 - 57		
							QC 2 - 62		
							QC 2 - 63		
							QC 2 - 8		
							QC 2 - 66		
							QC 2 - 64		

DART AEROSPACE
Container No: S318488
Part: 60621-01
Job No: 216010
Serial No/Batch: S318488
Revision: REV.3
Inspector:
Exp Date:
Instructions: TC STC SH00-48 Issue 11 dated 19/12/17, F/

1270 Aberdeen Street
Hawkesbury, ON K6A 1K7
CANADA
TEL.: 1 613 632-5200
Email: sales@dartaero.com
www.dartaerospace.com

					QC 2 - 65	
					QC 2 - 5	
					QC 2 - 71	
					QC 2 - 73	
					QC 2 - 69	
					QC 2 - 76	
					QC 2 - 86	
					QC 2 - 83	
120	**QC 8**	4 pcs	12/10/20	0.00 0.00	QC 8 - 12	
					QC 8 - 14	
					QC 8 - 17	
					QC 8 - 20	
					QC 8 - 25	
					QC 8 - 3	
					QC 8 - 32	
					QC 8 - 33	
					QC 8 - 35	
					QC 8 - 39	
					QC 8 - 4	
					QC 8 - 44	
					QC 8 - 45	
					QC 8 - 49	
					QC 8 - 58	
					QC 8 - 8	
					QC 8 - 9	
					QC 8 - 68	
					QC 8 - 67	
					QC 8 - 1 (A)	
					QC 8 - 47	
					QC 8 - 40	DAS
					QC 8 - 52	52 20/12/06
					QC 8 - 23	9-89
					QC 8 - 57	
					QC 8 - 76	
					QC 8 - 61	
					QC 8 - 66	
					QC 8 - 73	
					QC 8 - 82	
130	**Handfinish - 1-1 Chemical-B4B**	4 pcs	12/10/20	0.00 0.50	Handfinish - 1 - 1 - B4B	BEB 02/12/2020
					Handfinish - 1 - 2 - B4B	
					Handfinish - 1 - 3 - B4B	
					Handfinish - 1 - 4 - B4B	
					Handfinish - 1 - 5 - B4B	
					Handfinish - 1 - 6 - B4B	
					Handfinish - 1 - 7 - B4B	
					Handfinish - 1 - 8 - B4B	
					Handfinish - 1 - 9 - B4B	
					Handfinish - 1 - 10 - B4B	
					Handfinish - 1 - 11 - B4B	
					Handfinish - 1 - 12 - B4B	
					Handfinish - 1 - 13 - B4B	
					Handfinish - 1 - 14 - B4B	
					Handfinish - 1 - 15 - B4B	
					Handfinish - 1 - 16 -	

				B4B	
				Handfinish - 1 - 17 - B4B	
				Handfinish - 1 - 18 - B4B	
				Handfinish - 1 - 19 - B4B	
				Handfinish - 1 - 20 - B4B	
				Handfinish - 1 - 21 - B4B	
				Handfinish - 1 - 22 - B4B	
140 **QC 7**	4 pcs	12/10/20	0.00 0.00	QC 7 - 10	
				QC 7 - 13	
				QC 7 - 14	
				QC 7 - 15	
				QC 7 - 17	
				QC 7 - 18	
				QC 7 - 19	
				QC 7 - 2	
				QC 7 - 28	
				QC 7 - 3	
				QC 7 - 30	
				QC 7 - 34	
				QC 7 - 36	
				QC 7 - 37	
				QC 7 - 41	
				QC 7 - 47	
				QC 7 - 48	
				QC 7 - 51	
				QC 7 - 58	
				QC 7 - 59	
				QC 7 - 60	
				QC 7 - 9	
				QC 7 - 68	
				QC 7 - 50	DAS
				QC 7 - 67	40
				QC 7 - 40	DEC 0 7 2020 3-89
				QC 7 - 24	
				QC 7 - 43	
				QC 7 - 61	
				QC 7 - 81	
				QC 7 - 76	
				QC 7 - 79	
				QC 7 - 83	
				QC 7 - 82	
				QC 7 - 87	DAS
150 **Spray Paint - 2 - B4B**	4 pcs	12/11/20	0.00 2.00	Spray Paint - 1 - B4B	41 DEC 1 8 2020
				Spray Paint - 2 - B4B	3-89
				Spray Paint - 3 - B4B	
				Spray Paint - 4 - B4B	
160 **QC 14**	4 pcs	12/11/20	0.00 0.00	QC 14 - 15	
				QC 14 - 2	
				QC 14 - 34	
				QC 14 - 41	
				QC 14 - 51	
				QC 14 - 58	
				QC 14 - 59	
				QC 14 - 9	

				QC 14 - 68	DAS
				QC 14 - 40	DEC 0 9 2020 40
				QC 14 - 19	9-80
				QC 14 - 43	
				QC 14 - 24	
				QC 14 - 61	
				QC 14 - 81	
				QC 14 - 82	
				QC 14 - 87	
				QC 14 - 47	
165 **Packaging 3-1 - Stock - B4B**	4 ✓ pcs	12/11/20	0.00 0.00	Packaging 3 - 1 - B4B	DAS
				Packaging 3 - 2 - B4B	80
				Packaging 3 - 3 - B4B ✓	D[illegible]89 ADS020
				Packaging 3 - 4 - B4B	[illegible]
				Packaging 3 - 5 - B4B	[illegible]89 DEC 1 0 2020
				Packaging 3 - 6 - B4B	
				Packaging 3 - 7 - B4B	
				Packaging 3 - 8 - B4B	DEC 0 7 2020
				Packaging 3 - 9 - B4B	
				Packaging 3 - 10 - B4B	
				Packaging 3 - 11 - B4B	
				Packaging 3 - 12 - B4B	
				Packaging 3 - 13 - B4B	
				Packaging 3 - 14 - B4B	
				Packaging 3 - 15 - B4B	
				Packaging 3 - 16 - B4B	
				Packaging 3 - 17 - B4B	
				Packaging 3 - 18 - B4B	
				Packaging 3 - 19 - B4B	
				Packaging 3 - 20 - B4B	
				Packaging 3 - 21 - B4B	
				Packaging 3 - 22 - B4B	
				Packaging 3 - 23 - B4B	
				Packaging 3 - 24 - B4B	
				Packaging 3 - 25 - B4B	
				Packaging 3 - 26 - B4B	
				Packaging 3 - 27 - B4B	
				Packaging 3 - 28 - B4B	
				Packaging 3 - 29 - B4B	
				Packaging 3 - 30 - B4B	
				Packaging 3 - 31 - B4B	
				Packaging 3 - 32 - B4B	
				Packaging 3 - 33 - B4B	
				Packaging 3 - 34 - B4B	DEC 1 0 2020
				Packaging 3 - 35 - B4B	
				Packaging 3 - 36 - B4B	DAS
				Packaging 3 - 37 - B4B	28
170 **QC21-SA**	4 Ea	12/11/20	0.00 0.00	QC 21 - SA - 21	9-89 DEC 0 9 2020

Part Op Descriptions: **100** - 1-Machine as per folio FD178 (Same as D5841-1) FOLIO REV: AA DWG REV: 3 2-Deburr
110 - QC2- Inspect parts off machine FAI/FAIB
120 - QC8- Inspect parts - second check
130 - (Chemical Conversion Coat per QSI005 4.1)
140 - (QC7-Inspect Chemical Conversion Coat)
150 - 1-PRIME AS PER DWG D5841 AND QSI005 4.2.1 PRIMER BATCH: 5299680 2-PAINT AS PER DWG D5841 AND QSI005 4.2.2 PAINT BATCH: 5314697
160 - (QC14- Inspect Spray Paint)
165 - (Identify as per dwg & Stock Location:_____)
170 - QC21- Final Inspection - Work Order Release

Job BOM

Part / Item	Component Name	Quantity	Operation	Container
M6061T6B3.500X03.500	6061-T6 Bar 3.5" X 3.5" (Cut To 6 ft)	2.0400 ft (.51 ea)	100-HAAS 5 Axis	S191233 2.062' used

Job Allocations

Operation	Component Part	Required	Inventory	Allocated
100-HAAS 5 Axis	M6061T6B3.500X03.500	2	5	0

MAT007

Part Specifications

Specifications could not be found.

Plex 11/26/20 9:42 AM Dart.lajeunesse.marie

DART AEROSPACE LTD

Work Order:	216010
Description: BELL 407 FORWARD FITTING	**Part Number:** 60621-01
Inspection Dwg: 60621 **Rev:** 3	Page 1 of 1

INSPECTION SHEET

Drawing Dimension	Tolerance	Actual Dimension	Accept	Reject	Method of Inspection	Comments
0.25	+/-0.030	.250	✓		Vern ML-08	
2.40	+/-0.030	2.400	✓		"	
0.25	+/-0.030	.250	✓		"	
2.65	+/-0.030	2.650	✓		"	
1.00	+/-0.030	1.000	✓		"	
1.13	+/-0.030	1.125	✓		"	
5.88	+/-0.030	5.875	✓		"	
3.00	+/-0.030	2.994	✓		"	
0.281	+/-0.010	.280	✓		"	
2.438	+/-0.005	2.438	✓		"	
1.219	+/-0.005	1.219	✓		"	
2.35	+/-0.030	2.350	✓		"	
0.03	+/-0.030	.030	✓		"	
R0.13	+/-0.030	R.125	✓		R-G	
5.88	+/-0.030	5.875	✓		Vern ML-08	
4.875	+/-0.005	4.875	✓		"	
3.25	+/-0.030	3.250	✓		"	
0.50	+/-0.030	.502	✓		"	
2.94	+/-0.030	2.938	✓		"	
0.257	+0.006/-0.001	Ø.258	✓		"	
0.625	+/-0.010	.624	✓		G-pin	
0.755	+0.010/-0.000	.757	✓		"	
1.40	+/-0.030	1.402	✓		Vern ML-08	
0.796	+/-0.010	.799	✓			
3.00	+/-0.030	3.000	✓		Vern ML-08	
2.500	+0.031/-0.000	2.516	✓		"	
0.323	+0.006/-0.001	Ø.322	✓		G-Pin	
0.59	0.030	.590	✓		Vern ML-08	
0.313	+0.000/-0.010	.312	✓		"	

Measured by:		Checked by:	DAS 52	QC Inspector:	
Date:	20/12/05	Date:	9-89 12/13/06	Date:	

Engineering Approval: (If necessary)		Date:	

Rev	Date	Change	Revised by	Approved
A	5-Dec-20	New Issue	MG	

DART AEROSPACE LTD	Work Order:	216010
Description: BELL 407 FORWARD FITTING	**Part Number:**	60621-01
Inspection Dwg: 60621 **Rev: 3**		**Page 1 of 1**

INSPECTION SHEET

Drawing Dimension	Tolerance	Actual Dimension	Accept	Reject	Method of Inspection	Comments
1.50	+/-0.030	1.502	—		Vern MC-08	
1.75	+/-0.030	1.747	—		"	
0.63	+/-0.030	.625	—		"	
1.50	+/-0.030	1.502	—		"	
1.44	+/-0.030	1.436	—		"	
0.688	+/-0.010	.688	—		"	
4.500	+/-0.005	4.500	—		"	
2.90	+/-0.030	2.903	—		"	
2.65	+/-0.030	2.650	—		"	
1.13	+/-0.030	1.125	—		"	
1.00	+/-0.030	1.000	—		"	
0.060	+/-0.010	.068	—		"	
0.039	+/-0.010	.039	—		"	
1.50	+/-0.030	1.502	—		"	
1.00	+/-0.030	1.000	—		"	
R0.13	+/-0.030	R.125	—		R-6	
R0.13	+0.000/-0.030	R.125	—		R-6	
R0.19	+/-0.030	R.190	—		"	
0.391	+/-0.010	.393	—		Vern MC-08	
0.25	+/-0.030	.250	—		"	
			DAS 52 9-89			

Measured by:	[signature]	Checked by:	[signature]	QC Inspector:	
Date:	20/12/05	Date:	20/12/06	Date:	

Engineering Approval: (If necessary)		Date:	

Rev	Date	Change	Revised by	Approved
A	5-Dec-20	New Issue	MG	

NOTICE
THIS DRAWING CONTAINS INFORMATION AND DATA WHICH IS PROPRIETARY TO AERO DESIGN LTD. THIS DRAWING, OR ANY PORTION THEREOF, MAY NOT BE REPRODUCED, COPIED, OR DUPLICATED IN ANY MANNER, NOR USED FOR MANUFACTURING WITHOUT THE WRITTEN CONSENT OF AERO DESIGN LTD. BY ACCEPTING THIS DRAWING FOR REFERENCE, THE RECIPIENT AGREES TO HOLD AERO DESIGN LTD. HARMLESS FROM THE USE, OR MISUSE, OF THIS DRAWING OR THE INFORMATION CONTAINED THEREON.

REV.	DESCRIPTION OF CHANGE	INITIALS	DATE
1	CHANGES TO ACCOMODATE CNC MACHINING	BJC	3 MAY 2006
2	INCREASE SADDLE DIAMETER TO 2.500	BJC	11 JULY 2006
3	TITLE BLOCK UPDATED; BARREL NUT HOLE MODIFIED, P/N POCKET ADDED AND ANODIZING FINISH ADDED PER REV. 2 CHG. A	BJC	09/10/2018

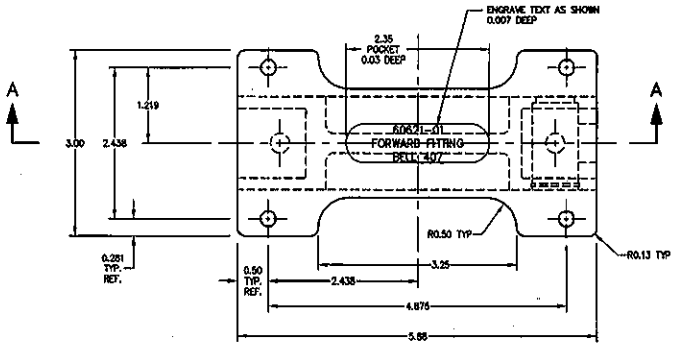

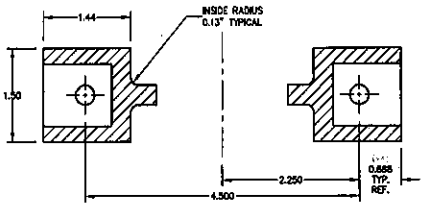

SECTION B–B

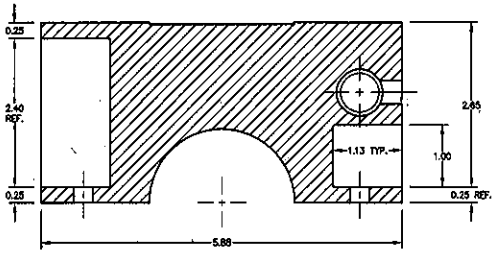

SECTION A–A

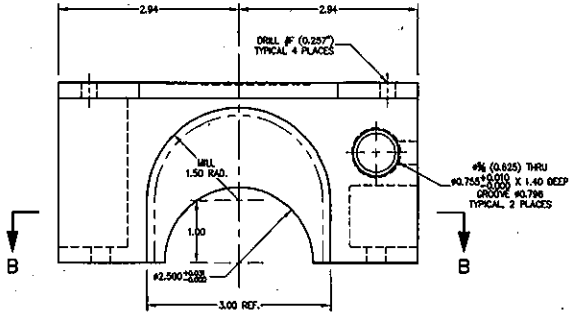

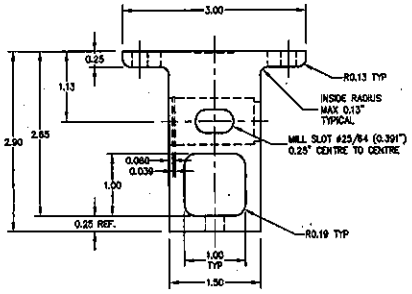

(01) FORWARD FITTING

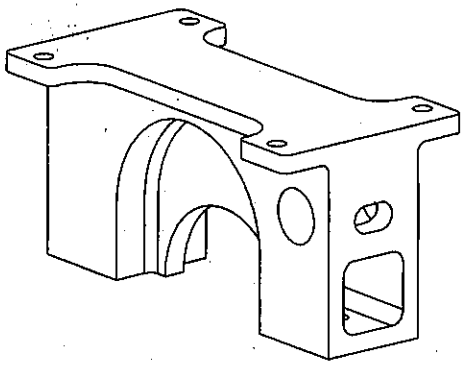

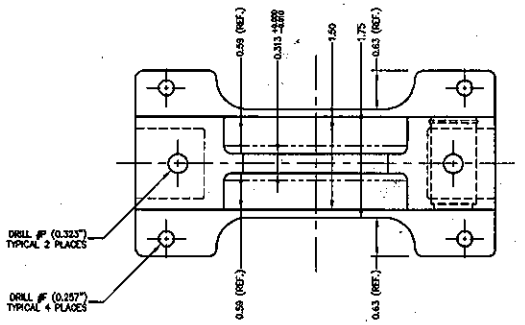

NOTES:
1. REMOVE ALL BURRS AND BREAK ALL SHARP EDGES.
2. THOROUGHLY CLEAN, EPOXY PRIME, AND PAINT PART PRIOR TO ASSEMBLY. ALTERNATE: ANODIZE IN ACCORDANCE WITH MIL-A-16625F, TYPE II.

QTY.	PART NO.	ITEM	DESCRIPTION	MATERIAL	MATERIAL SPEC.	STOCK SIZE
2	60621-01	01	FORWARD FITTING	6061-T651 ALUMINUM	QQ-A-200/8	3.0 SQR. BAR

LIST OF MATERIALS

APPROVALS		DATE
DRAWN:	JEFF CLARKE	25 MAR 2004
CHECKED:	E. BURGOIN	31 MAY 2004

UNLESS OTHERWISE SPECIFIED DIMENSIONS ARE IN INCHES. TOLERANCES ON:

DECIMALS	ANGLES
X.XXX ±0.010	±1/2°
X.XX ±0.03	
X.X ±0.1	

AERO DESIGN LTD.
9988A MALASPINA ROAD
POWELL RIVER, BC, CANADA, V8A 0G3
TEL: 604.485.2378
www.aerodesign.ca

BELL 407
EXTERNAL ATTACHMENT PROVISIONS
FORWARD FITTING

SCALE	DWG. SIZE	DWG. NO.	REV.
1 : 1	A1	60621	3
SHEET 1 OF 1			

Entered: _____ Date: _____

DART AEROSPACE

WORK ORDER NON-CONFORMANCE / ROUTE UPDATE

NCR No.

Route update only ☐

Job: _____

Part No. _____

DISPOSITION

Rework ☐
Scrap ☐
Use-as-is ☐

DEPARTMENT/PROCESS

Skid-tube ☐ Cross tube ☐ Eng. (Non-AW) ☐ Engineering ☐
Machining ☐ Small Fab ☐ Prod. Eng. Coor. ☐ Water Jet ☐
Large Fab ☐ Finishing ☐ Rec/Store/Packaging ☐ Supplier ☐
Quality ☐

Date :	Sequence #:	QTY Affected :	MRB (QSI042)

Description Work Order Deviation	Disposition	Completed By
		Lead hand / Supervisor
		QC / QA Coordinator

Root Cause

Operator ☐
Manufacturing Process ☐
Equip/Tooling ☐
Handling/Presservation ☐
Material ☐
Product Improvement ☐
Process Improvement ☐
Human Factors ☐

FAULT CATEGORY

☐ Pressure/Forced
☐ Bending
☐ Crushing
☐ Cracks
☐ Crimp/Kink/Ripple/Wave/Twist
☐ Marks/Chatter
☐ Mislabeled
☐ Contamination
☐ Misaligned/off center
☐ BOM/Route
☐ Broken/Damage/Defect
☐ Incomplete/Unclear Instructions
☐ Drill Holes
☐ Fit/Function
☐ Power Loss/Surge
☐ Folio/Program
☐ Grain Direction
☐ Weld
☐ Wrong Stock Pulled
☐ Out of Sequence
☐ Off-set/Set-up
☐ Positioned Wrong
☐ Outside Tolerance
☐ Drawing
☐ Finish
☐ Part Lost/Missing
☐ Misread

Other/Details: